firstchoicelighting®

www.firstchoicelighting.co.uk
info@firstchoicelighting.co.uk

dimension diagram - 14/12/2020

60W Max E14 SES (required)
Non-dimmable
FCL-10721

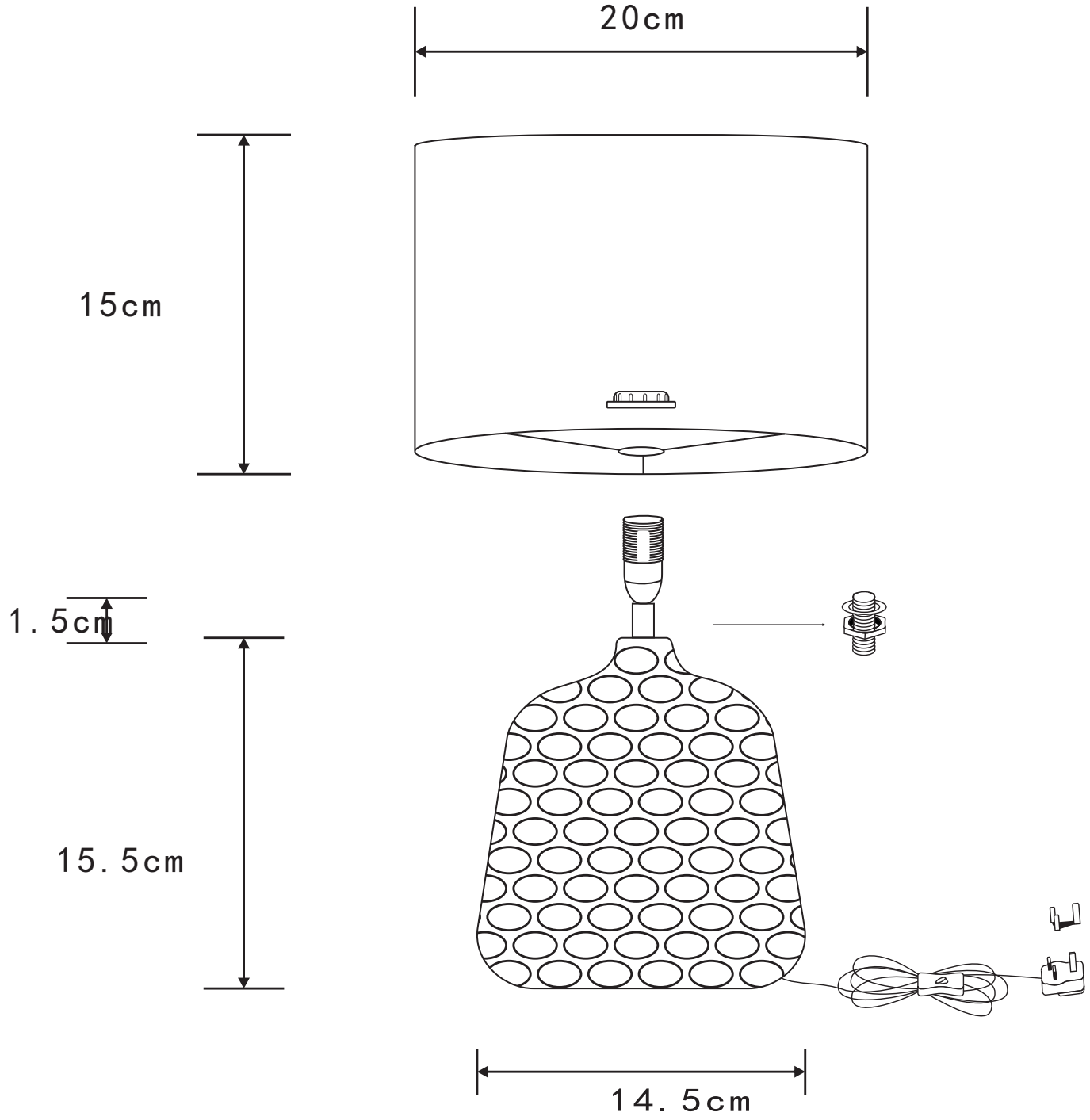

ip20 240V dim