firstchoice**lighting**®

www.firstchoicelighting.co.uk
info@firstchoicelighting.co.uk

dimension diagram - 14/12/2020

40W Max E14 SES (required)
Non-dimmable

FCL-11521

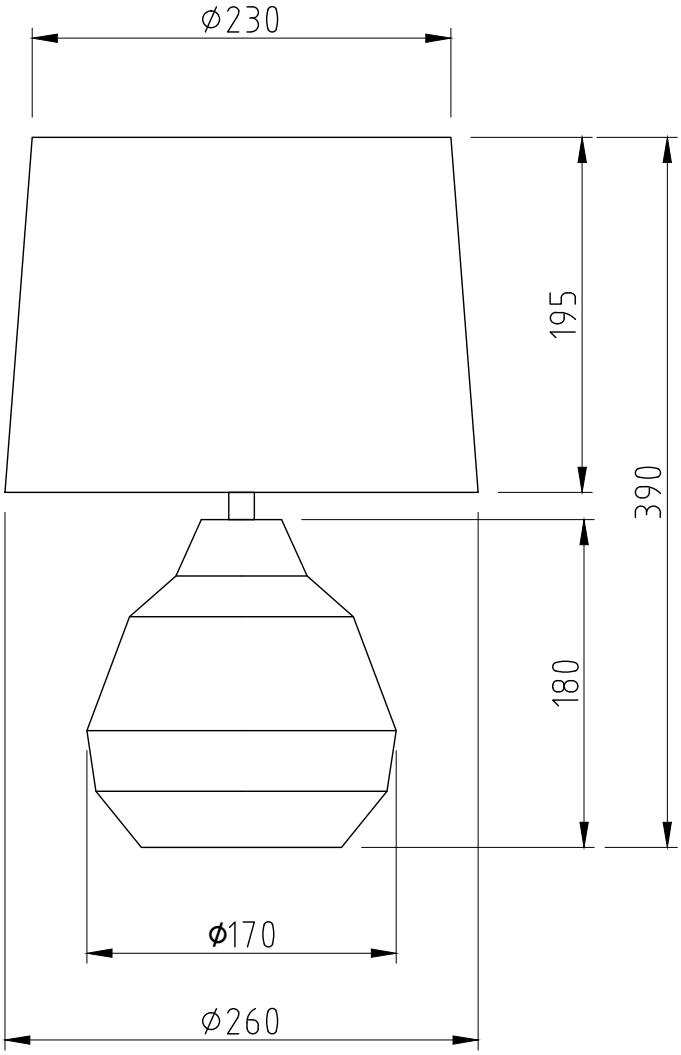

IP20 240V dim