ISSUE DATE 02/06/2023

Konstsmide - Orion - 496-750 - Black Outdoor Wall Light

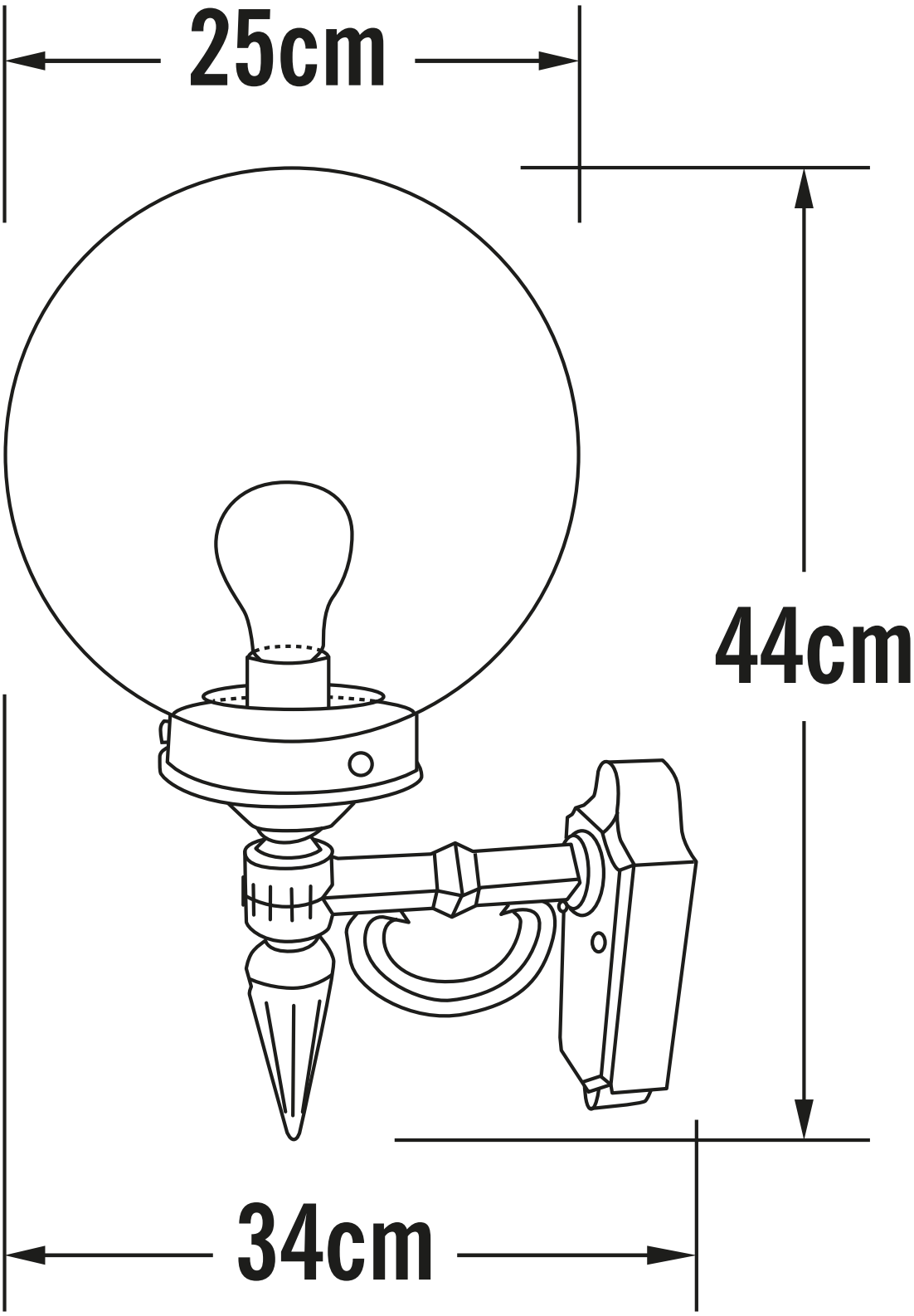

CONTACT

www.firstchoicelighting.co.uk

info@firstchoicelighting.co.uk