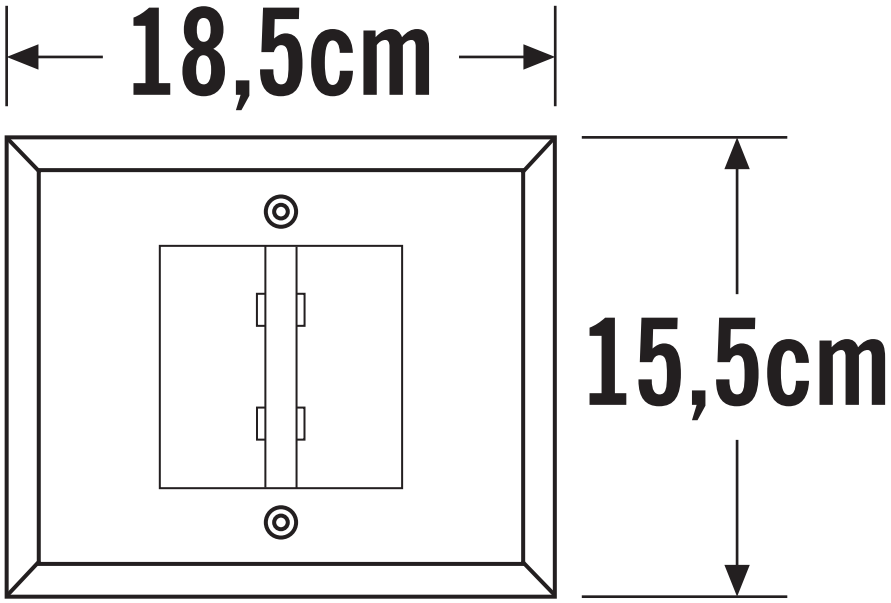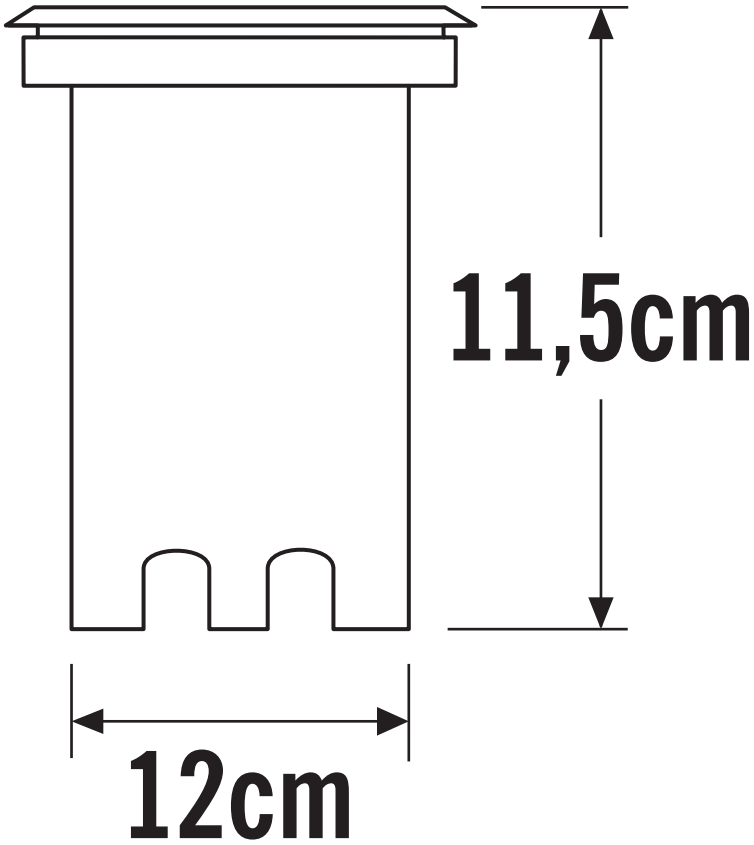Konstsmide - Ground Spot - 7962-310 - LED Stainless Steel IP65 Outdoor Ground Light