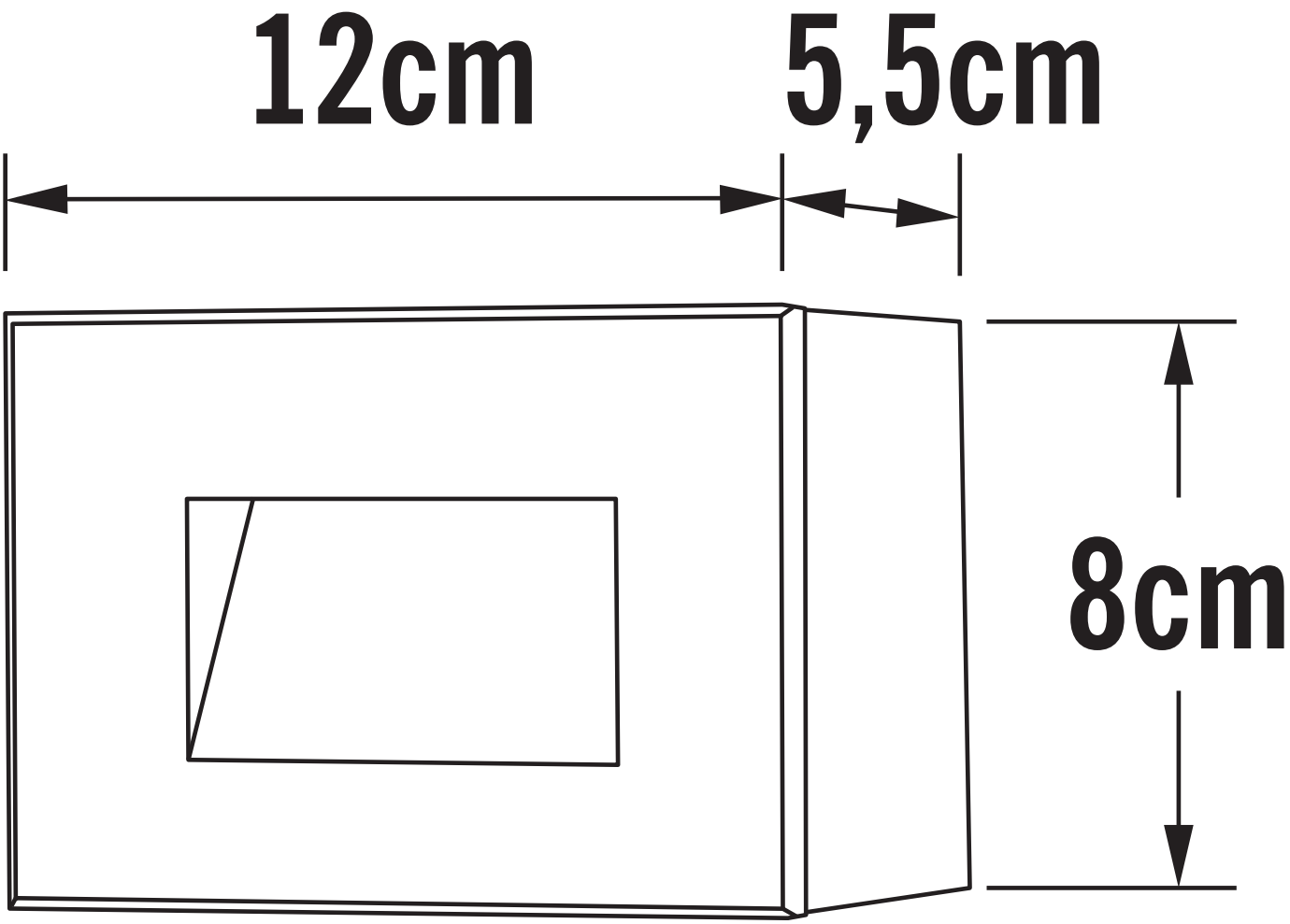Konstsmide - Chieri - 7862-250 - LED White 14 Light IP54 Outdoor Wall Washer Light