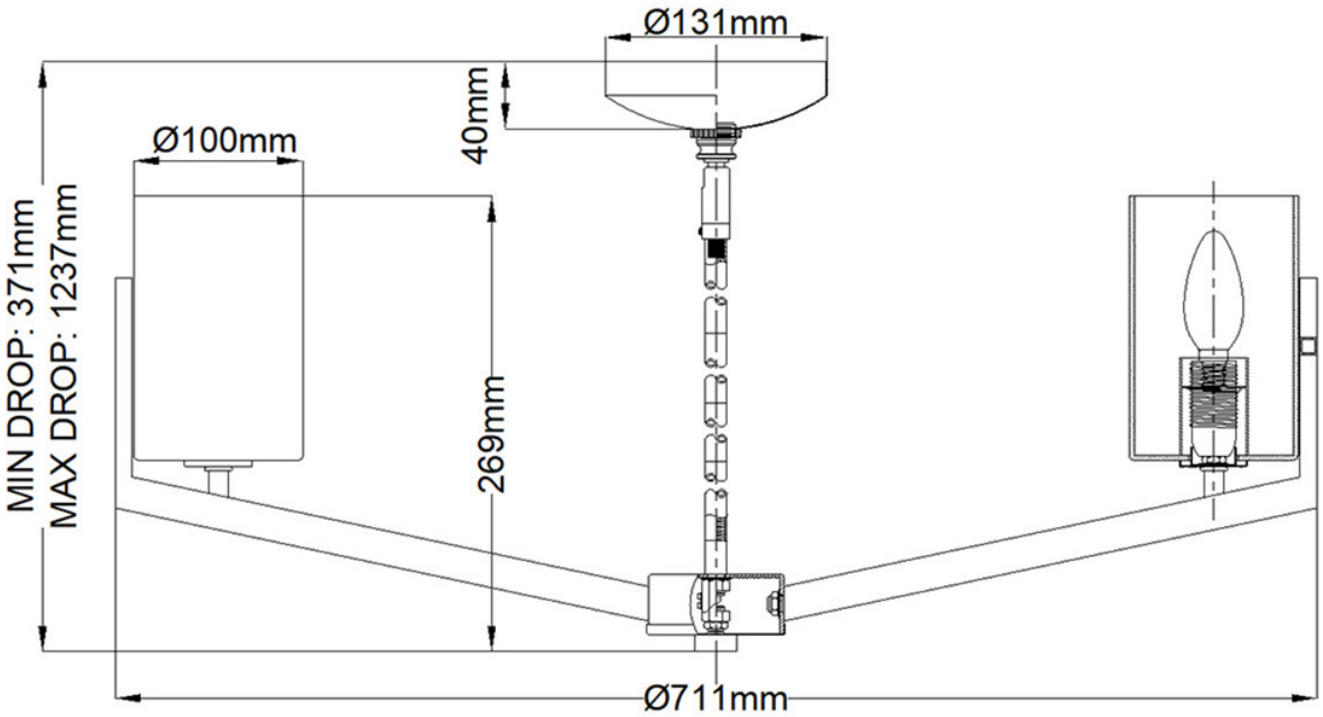Quintiesse - Nye - QN-NYE6-BNB - Natural Brass Clear Glass 6 Light Ceiling Pendant Light