HINKLEY
LIGHTING

ISSUE DATE 15/12/2023

LightingOnline GROUP

Elstead - Hinkley Lighting - Verve HK-VERVE3-BATH Wall Light

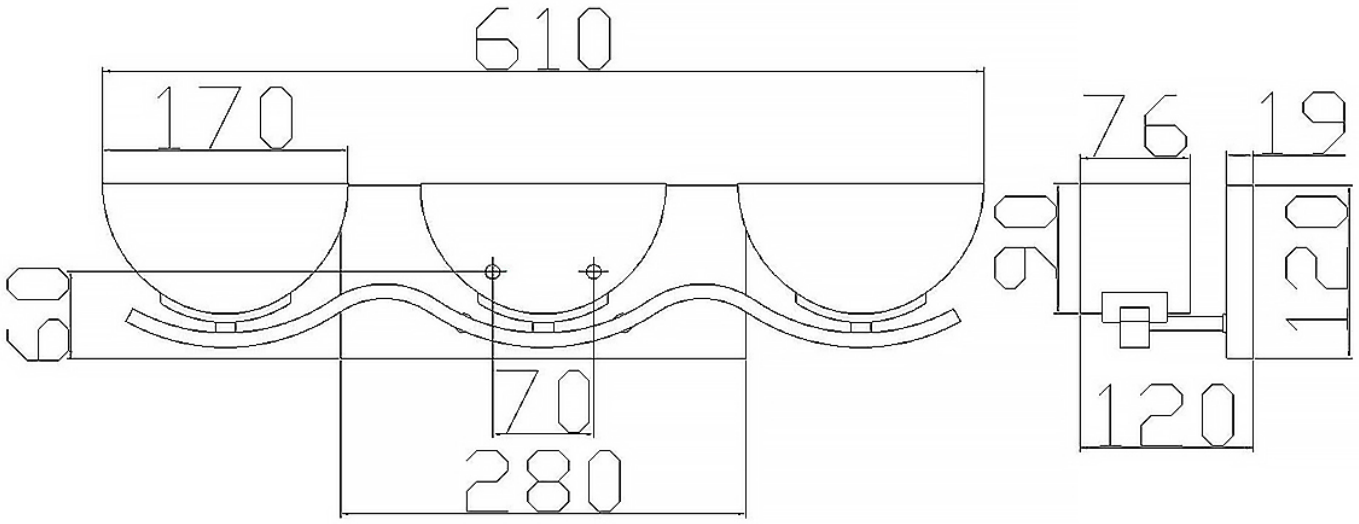

CONTACT

www.firstchoicelighting.co.uk
info@firstchoicelighting.co.uk