QUOIZEL
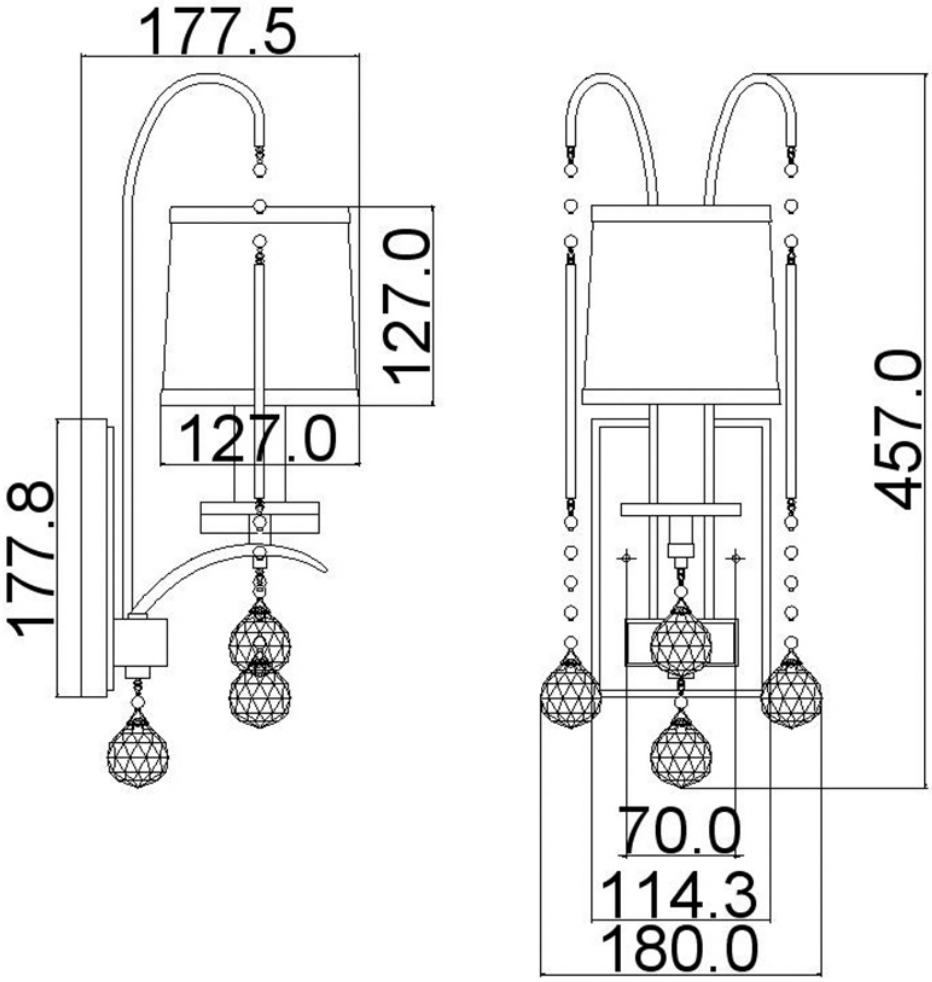
**Elstead - Quoizel - Whitney QZ-WHITNEY1 Wall Light**