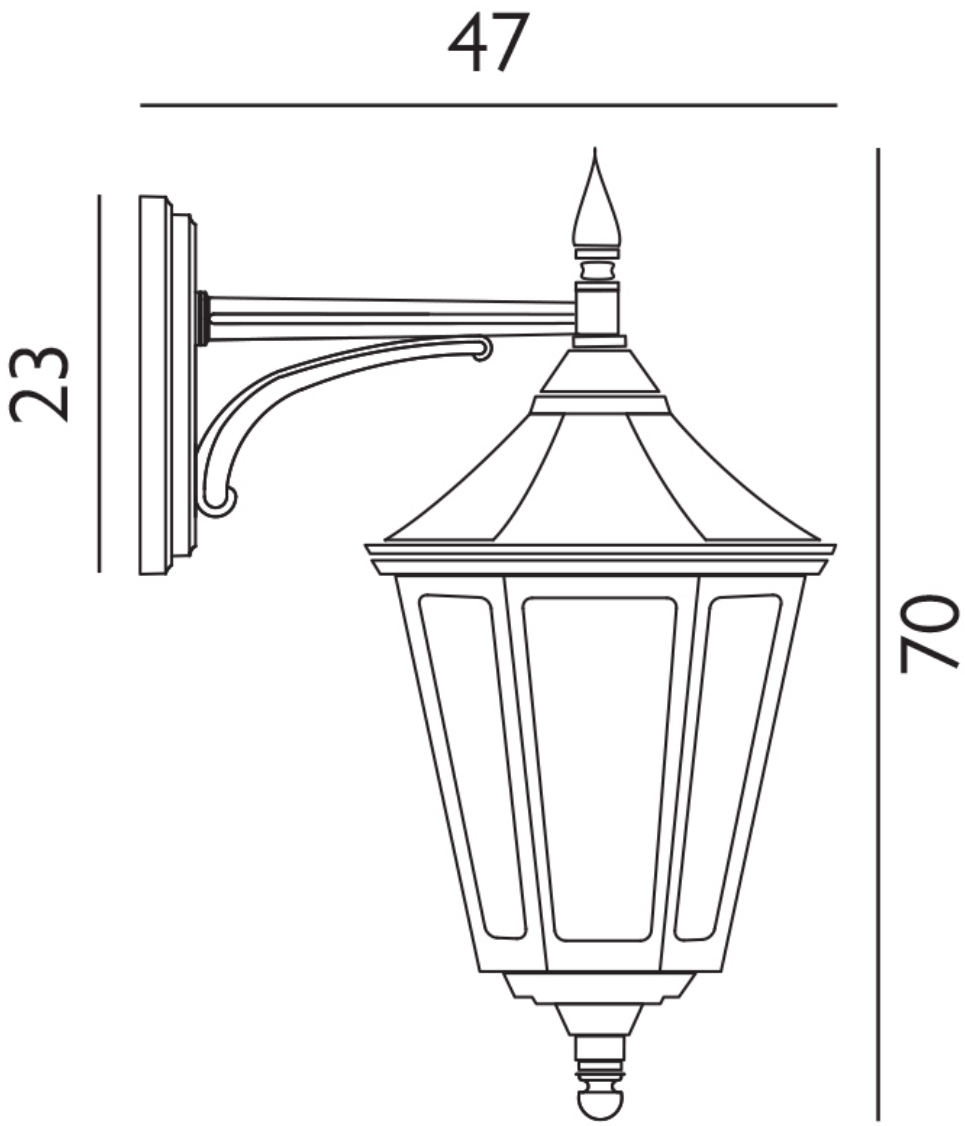Norlys Lighting - Valencia Grande - VG2-BLACK - Black Clear IP54 Outdoor Wall Light